Location:

SYMMONS®

SRT-4172
Roman Tub Faucet with Handspray
Specification Submittal

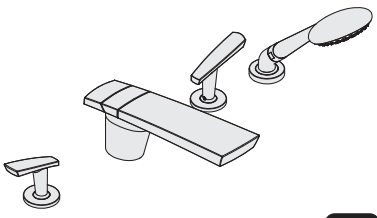

Model Numbers

☐ SLW-4172 Roman Tub Faucet with Handspray

Alternate Finish Options

Append appropriate suffix to model number.

☐ STN Satin Nickel Finish

Feature Highlights

- Two handle Roman Tub Faucet with quarter turn ceramic control components.
- Handspray and liftrod diverter
- 1/2 rigid copper tubing connections
- Cast brass spout
- Metal construction, polished chrome finish
- 2.0 gpm (7.6 L/min) flow restrictor standard in hand spray

Standards / Certifications

ASME A112.18.1/CSA B125.1

Warranty

Limited Lifetime - to the original end purchaser in consumer/residential installations.
10 Years - for commercial/industrial installations. Refer to www.symmons.com/warranty for complete warranty information.

Architectural/ Engineering Specification

Symmons _____ With Two handle Roman Tub Faucet with quarter turn ceramic control components, Handspray and liftrod diverter, 1/2 rigid copper tubing connections, Cast brass spout, Metal construction, polished chrome finish, 2.0 gpm (7.6 L/min) flow restrictor standard in hand spray. 10 Year commercial Warranty. ASME A112.18.1/CSA B125.1,complaint. Available options include: "STN - Satin Nickel Finish".

Dimensions Naru Roman Tub Faucet, *SRT-4172*

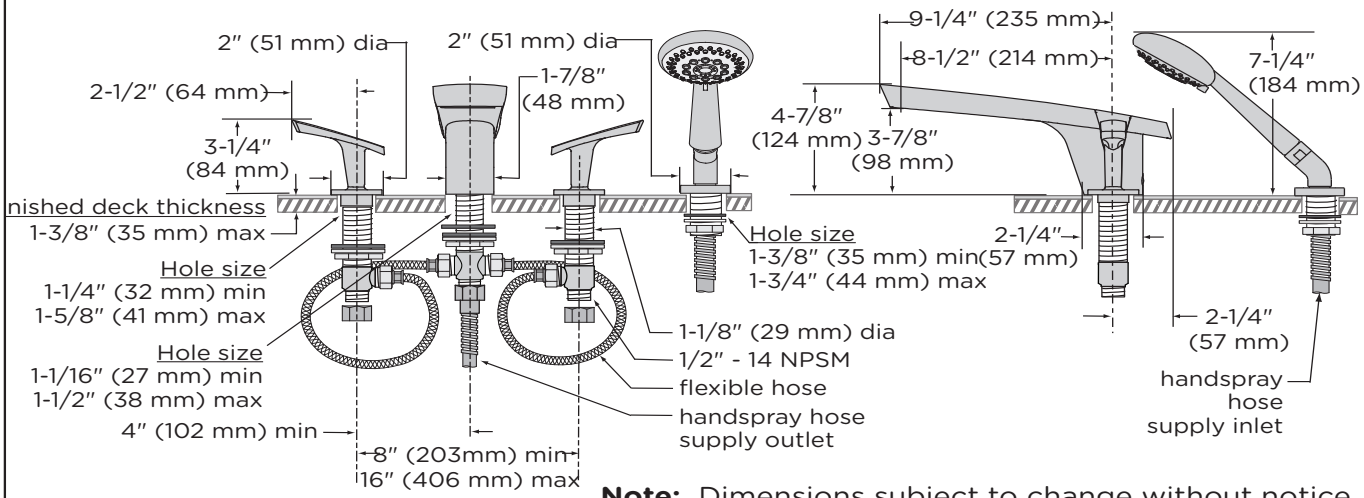

Note: Dimensions subject to change without notice

Symmons Industries, Inc. ▪ 31 Brooks Drive ▪ Braintree, MA 02184 ▪ Phone: (800) 796-6667 ▪ Fax: (800) 961-9621
Copyright © 2022 Symmons Industries, Inc. ▪ symmons.com ▪ gethelp@symmons.com ▪ ZV-671 REV A ▪ 050922